MAZKO ENTERPRISES



Since 1955

1500+ Products

PRODUCT CATALOG

Comprehensive catalog showcasing innovative, high-quality products along with technical specificatons.

WWW.MAZKO.IN



MARINE SOLUTIONS



Anchor Chain & Accessories

Shackles







KENTER SHACKLE=KS

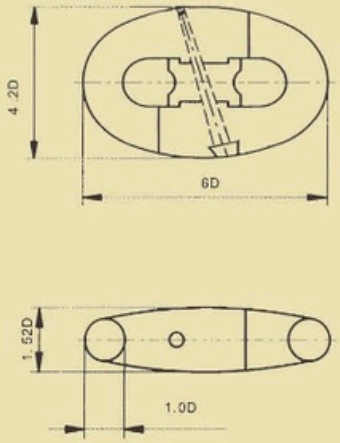

ANCHOR SHACKLE=A. S

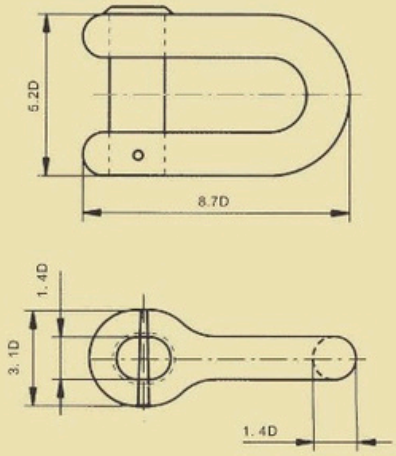

JOINING SHACKLE=JS

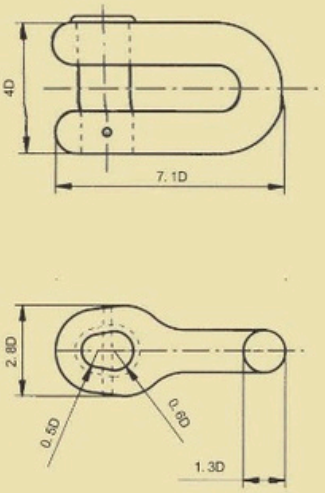



ANCHOR SWIVEL SHACKLE (a) =A.SW.S (a)

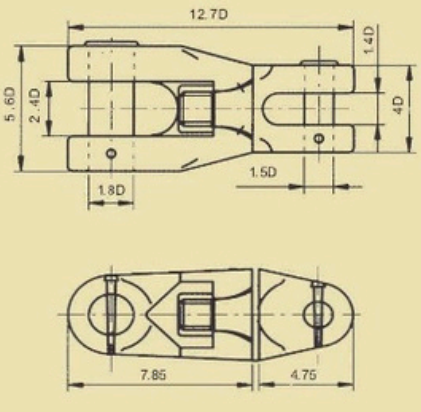



ANCHOR SWIVEL SHACKLE (b) =A.SW.S (b)

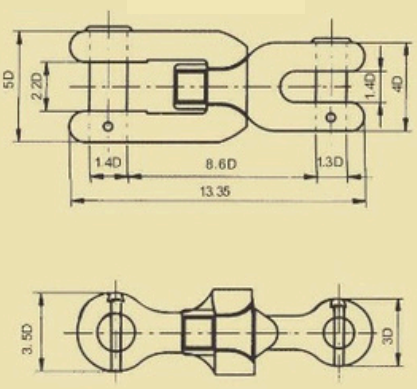

Buoy Shackle
Type "A"



Buoy Shackle
Type "B"



Links







COMMON LINK=C

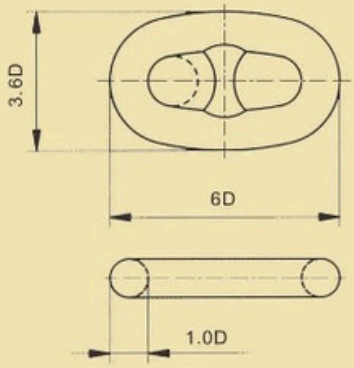

END LINK=E

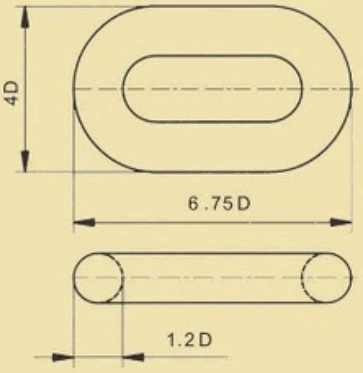

SWIVEL=SW

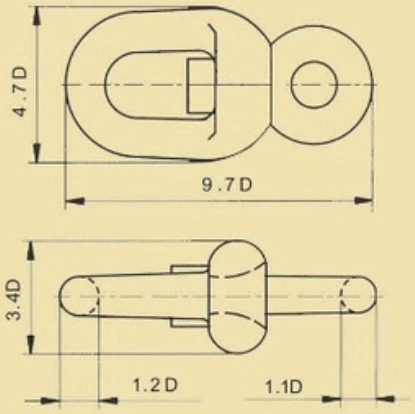

ENLARGED LINK=EL

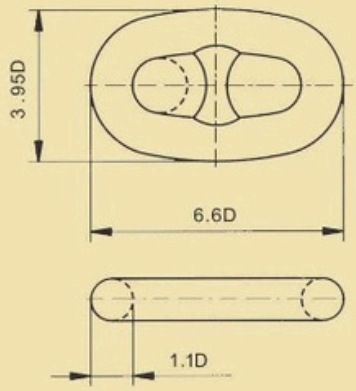

STUDLESS LINK=SL

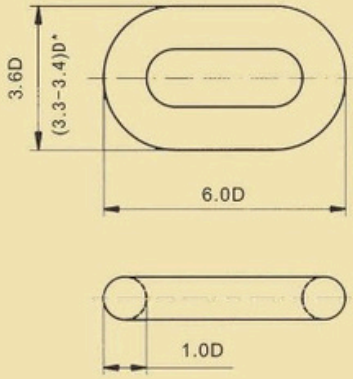



Pear Shaped Link



Triangle Plate (TP)



Round Link (RL)

Joining Shackles



LTM H–TYPE JOINING SHACKLE = LTM HJS

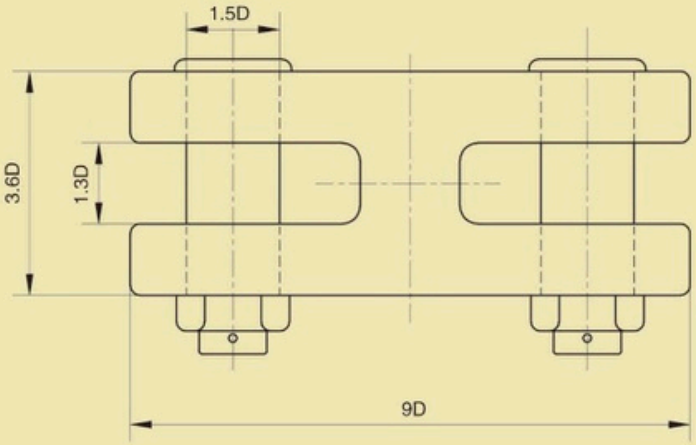

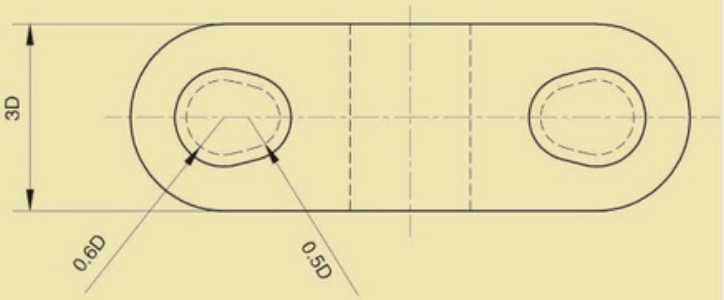



LTM END JOINING SHACKLE = LTM EJS

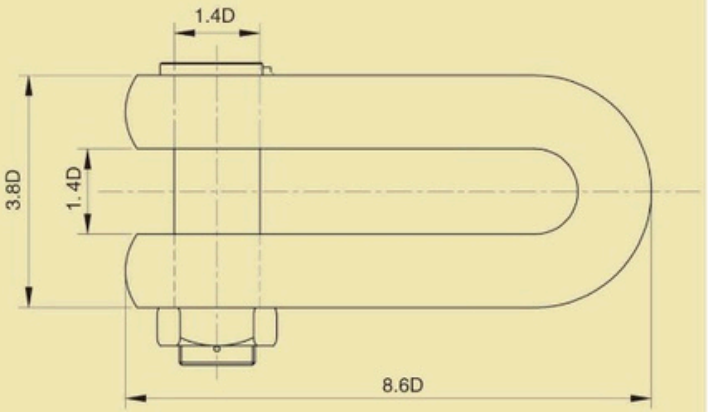

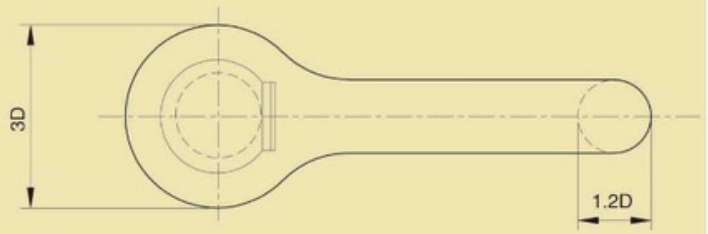



Pear Shaped Kenter Shackle

Drawingof Products

22CC

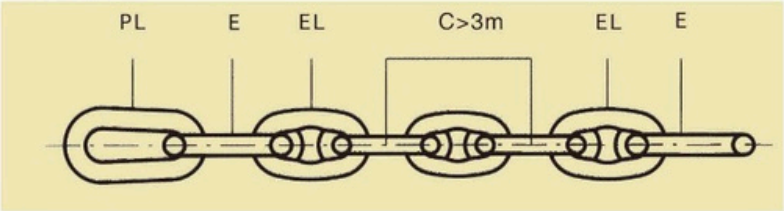

23CC

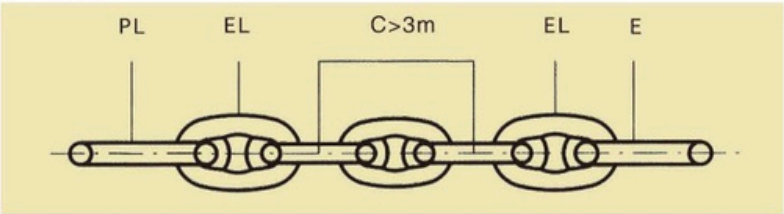

24CC

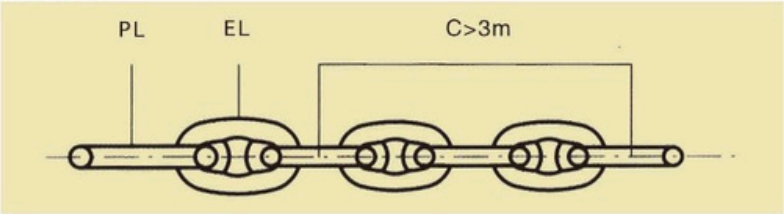

Φ 76PL

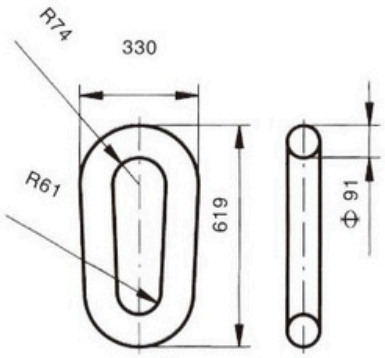

Φ 54PL

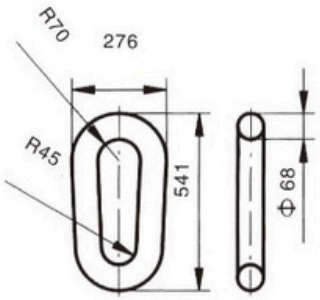

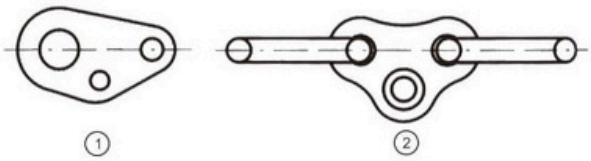

25CC

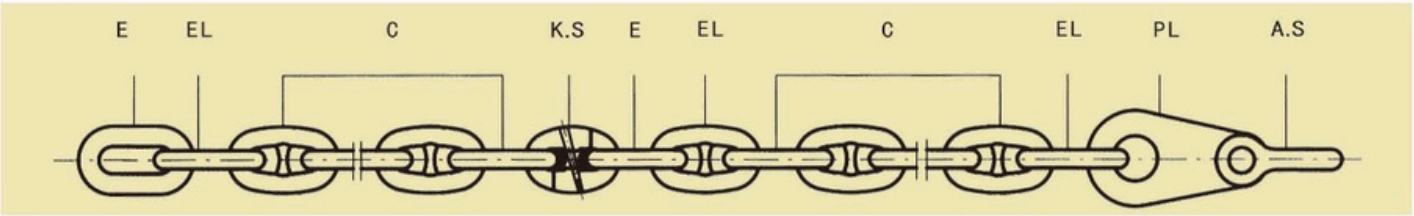

26CC

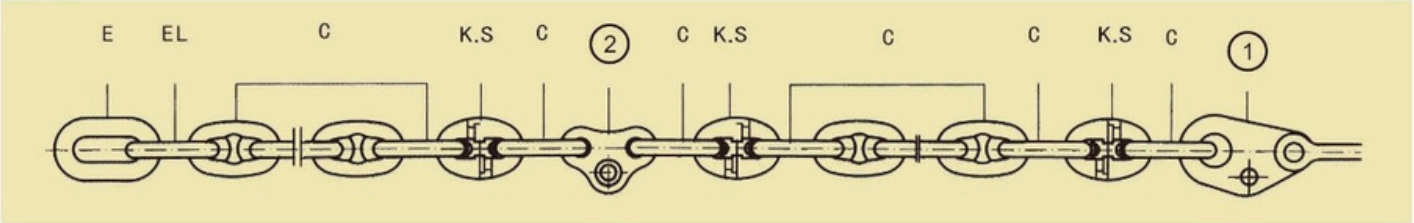

TESTING LOAD OF ANCHOR CHAIN AND ACCESSORIES & MOORING CHAIN

Diameter Of Chain	ANCHOR CHAIN				OFFSHORE MOORING CHAIN										
	ABS,BV,CCS,CR,DNV,GL, KR,LR,NK,RINA,RMRS				API		ABS	DNV / ABS	ABS/DNV	ABS/DNV			ABS/DNV		
							C/EL/E	C/EL/E/SL / SL	C/EL/E/SL	C/EL/E	SL	C/EL/E/SL	C/EL/E	SL	C/EL/E/SL
	Grade 2		Grade3		ORQ		RQ3	NVR3/RQ3	NVR3/RQ3	RQ3S/NVR3S			RQ4/NVR4		
	PL C=0.098	BL C=0.0137	PL C=0.0137	BL C=0.0196	PL C=0.014	BL C=0.0211	PL C=0.0148	PL C=0.0156	BL C=0.0223	PL C=0.0180	PL C=0.0174	BL C=0.0249	PL C=0.0216	PL C=0.0192	BL C=0.0274
mm	KN	KN	KN	KN	KN	KN	KN	KN	KN	KN	KN	KN	KN	KN	KN
12.5	66	92	92	132											
14	82	116	116	165	---	---	---	---	---	---	---	---	---	---	---
16	107	150	150	216	---	---	---	---	---	---	---	---	---	---	---
17.5	127	179	179	256	---	---	---	---	---	---	---	---	---	---	---
19	150	211	211	301	---	---	---	---	---	---	---	---	---	---	---
20.5	175	244	244	349	---	---	---	---	---	---	---	---	---	---	---
22	200	280	280	401	---	---	---	---	---	---	---	---	---	---	---
24	237	332	332	476	---	---	---	---	---	---	---	---	---	---	---
26	278	389	389	556	---	---	---	---	---	---	---	---	---	---	---
28	321	449	449	642	---	---	---	---	---	---	---	---	---	---	---
30	368	514	514	735	---	---	---	---	---	---	---	---	---	---	---
32	417	583	583	833	---	---	---	---	---	---	---	---	---	---	---
34	468	655	655	937	668	1007	706	745	1064	859	831	1188	1031	916	1308
36	523	732	732	1050	746	1124	789	832	1189	960	928	1327	1151	1022	1460
38	581	812	812	1160	828	1248	876	923	1319	1065	1029	1473	1278	1135	1621
40	640	896	896	1280	914	1376	967	1019	1456	1176	1136	1626	1411	1253	1789
42	703	981	981	1400	999	1513	1056	1114	1592	1285	1242	1777	1542	1370	1956
44	769	1080	1080	1540	1097	1654	1160	1223	1748	1411	1364	1951	1693	1503	2147
46	837	1170	1170	1680	1194	1800	1263	1331	1902	1535	1484	2124	1843	1636	2337
48	908	1270	1270	1810	1295	1952	1369	1443	2063	1665	1610	2304	2037	1775	2535
50	981	1370	1370	1960	1400	2110	1480	1561	2230	1800	1743	2490	2160	1918	2740
52	1060	1480	1480	2110	1508	2273	1594	1682	2402	1939	1877	2682	2327	2066	2952
54	1140	1590	1590	2270	1620	2441	1712	1806	2580	2083	2017	2881	2499	2219	3170
56	1220	1710	1710	2430	1735	2615	1834	1935	2764	2231	2160	3086	2677	2378	3396
58	1290	1810	1810	2600	1851	2794	1960	2068	2953	2383	2308	3297	2860	2540	3628
60	1380	1940	1940	2770	1976	2978	2089	2203	3147	2540	2460	3514	3048	2708	3867
62	1470	2060	2060	2940	2101	3166	2221	2343	3347	2701	2616	3737	3242	2879	4112
64	1560	2190	2190	3130	2230	3360	2357	2486	3551	2867	2776	3965	3440	3055	4364
66	1660	2310	2310	3300	2361	3559	2496	2633	3761	3036	2940	4200	3643	3235	4621
68	1750	2450	2450	3500	2496	3762	2639	2784	3976	3209	3108	4440	3851	3420	4885
70	1840	2580	2580	3690	2631	3970	2785	2938	4196	3387	3289	4685	4064	3610	5156

TESTING LOAD OF ANCHOR CHAIN AND ACCESSORIES & MOORING CHAIN

Diameter Of Chain	ANCHOR CHAIN				OFFSHORE MOORING CHAIN										
	ABS,BV,CCS,CR,DNV,GL, KR,LR,NK,RINA,RMRS				API		ABS	DNV / ABS	ABS/DNV	ABS/DNV			ABS/DNV		
							C/EL/E	C/EL/E/SL / SL	C/EL/E/SL	C/EL/E	SL	C/EL/E/SL	C/EL/E	SL	C/EL/E/SL
	Grade 2		Grade3		ORQ		RQ3	NVR3/RQ3	NVR3/RQ3	RQ3S/NVR3S			RQ4/NVR4		
	PL C=0.098	BL C=0.0137	PL C=0.0137	BL C=0.0196	PL C=0.014	BL C=0.0211	PL C=0.0148	PL C=0.0156	BL C=0.0223	PL C=0.0180	PL C=0.0174	BL C=0.0249	PL C=0.0216	PL C=0.0192	BL C=0.0274
mm	KN	KN	KN	KN	KN	KN	KN	KN	KN	KN	KN	KN	KN	KN	KN
73	1990	2790	2790	3990	2847	4291	3010	3175	4535	3660	3545	5064	4392	3900	5572
76	2150	3010	3010	4300	3066	4621	3242	3419	4884	3942	3818	5454	4731	4206	6001
78	2260	3160	3160	4500	3216	4847	3400	3587	5123	4135	4004	5720	4962	4411	6295
81	2410	3380	3380	4820	3446	5194	3643	3843	5490	4431	4291	6130	5317	4727	6745
84	2580	3610	3610	5160	3683	5550	3893	4107	5866	4735	4585	6550	5682	5051	7208
87	2750	3850	3850	5500	3925	5916	4149	4377	6252	5046	4887	6981	6056	5383	7682
90	2920	4090	4090	5840	4173	6289	4412	4653	6647	5365	5196	7422	6439	5724	8167
92	3040	4260	4260	6080	4242	6544	4590	4842	6916	5582	5405	7722	6699	5955	8497
95	3230	4510	4510	6440	4599	6932	4862	5128	7326	5913	5726	8180	7096	6308	9001
97	3340	4680	4680	6690	4774	7195	5047	5323	7604	6138	5943	8490	7365	6547	9343
100	3530	4940	4940	7060	5040	7596	5328	5620	8028	6480	6275	8964	7776	6912	9864
102	3660	5120	5120	7320	5220	7868	5519	5821	8315	6712	6500	9285	8054	7160	10217
105	3850	5390	5390	7700	5495	8282	5809	6128	8753	7065	6842	9773	8478	7536	10754
107	3980	5570	5570	7960	5681	8561	6005	6334	9048	7304	7072	10103	8764	7791	11118
111	4250	5940	5940	8480	6058	9130	6401	6755	9650	7789	7543	10775	9347	8309	11856
114	4440	6230	6230	8890	6346	9565	6709	7077	10109	8159	7901	11287	9791	8704	12420
117	4650	6510	6510	9300	6639	10005	7018	7402	10574	8535	8265	11807	10242	9105	12993
120	4850	6810	6810	9720	6953	10452	7331	7733	11047	8916	8634	12334	10700	9511	13573
122	5000	7000	7000	9990	7135	10753	7542	7956	11365	9173	8883	12690	11008	9785	13964
124	5140	7200	7200	10280	7336	11057	7755	8175	11688	9433	9134	13048	11319	10062	14358
127	5350	7490	7490	10710	7641	11516	8078	8515	12172	9825	9514	13951	11790	10480	14955
130	5570	7800	7800	11140	7950	11981	8404	8858	12663	10222	9898	14140	12266	10903	15559
132	5720	8000	8000	11420	8157	12294	8623	9090	12994	10488	10157	14509	12586	11187	15965
137	6080	8510	8510	12160	8682	13085	9178	9674	13829	11163	10809	15442	13395	11907	16992
142	6450	9030	9030	12910	9214	13887	9740	10268	14677	11847	11472	16389	14217	12637	18034
147	6840	9560	9560	13660	9753	14670	10310	10869	15536	12540	12144	17348	15049	13377	19089
152	7220	10100	10100	14430	10299	15522	10887	11477	16405	13242	12823	18318	15890	14125	20157
157	7600	10640	10640	15200	11126	16768	11762	12090	17282	13950	13508	19297	16740	14880	21234
162	7990	11180	11180	15980	11405	17189	12057	12708	18166	14663	14199	20284	17596	15641	22320

Note: Test Load=c $Xd^2(44-0.08Xd)$

TESTING LOAD OF ANCHOR CHAIN AND ACCESSORIES & MOORING CHAIN

Diameter Of Chain	ANCHOR CHAIN				OFFSHORE MOORING CHAIN										
	ABS,BV,CCS,CR,DNV,GL, KR,LR,NK,RINA,RMRS				API		ABS	DNV / ABS	ABS/DNV	ABS/DNV			ABS/DNV		
							C/EL/E	C/EL/E/SL / SL	C/EL/E/SL	C/EL/E	SL	C/EL/E/SL	C/EL/E	SL	C/EL/E/SL
	Grade2		Grade3		ORQ		RQ3	NVR3/RQ3	NVR3/RQ3	RQ3S/NVR3S			RQ4/NVR4		
	PL C=1422	BL C=1991	PL C=1991	BL C=2844	PL C=2030.5	BL C=3060.3	PL C=2147	PL C=2265.2	BL C=3236	PL C=2610	PL C=2527	BL C=3610	PL C=3125	PL C=2783.9	BL C=3977
in	lbf	lbf	lbf	lbf	lbf	lbf	lbf	lbf	lbf	lbf	lbf	lbf	lbf	lbf	lbf
1/2	15300	21400	21400	30600											
9/16	19300	27000	27000	38600	---	---	---	---	---	---	---	---	---	---	---
5/8	23700	33200	33200	47500	---	---	---	---	---	---	---	---	---	---	---
11/16	28600	40100	40100	57300	---	---	---	---	---	---	---	---	---	---	---
3/4	34000	47600	47600	68000	---	---	---	---	---	---	---	---	---	---	---
13/16	39800	55700	55700	79500	---	---	---	---	---	---	---	---	---	---	---
7/8	46000	64400	64400	91800	---	---	---	---	---	---	---	---	---	---	---
15/16	52600	73700	73700	105000	---	---	---	---	---	---	---	---	---	---	---
1	59700	83600	83600	119500	---	---	---	---	---	---	---	---	---	---	---
1 1/16	67200	94100	94100	135000	---	---	---	---	---	---	---	---	---	---	---
1 1/8	75000	105000	105000	150000	---	---	---	---	---	---	---	---	---	---	---
1 3/16	83400	116500	116500	167000	---	---	---	---	---	---	---	---	---	---	---
1 1/4	92200	129000	129000	184000	---	---	---	---	---	---	---	---	---	---	---
1 5/16	101500	142000	142000	203000	---	---	---	---	---	---	---	---	---	---	---
1 3/8	111000	155000	155000	222000	158187	238413	167263	176471	252101	203333	196867	281238	243454	216880	309829
1 7/16	120500	169000	169000	241000	172361	259777	182251	192284	274691	221553	214507	306439	265269	236314	337592
1 1/2	131000	183500	183500	262000	187095	281983	197829	208721	298172	240491	232843	332633	287944	256515	366449
1 9/16	142000	198500	198500	284000	202381	305022	213993	225774	322534	260140	251868	359811	311471	277473	396390
1 5/8	153000	214000	214000	306000	218215	328885	230735	243437	347767	280492	271573	387961	335838	299181	427401
1 11/16	166500	229000	229000	327000	234589	353564	248048	261704	373863	301540	291951	417072	361039	321631	459472
1 3/4	176000	247000	247000	352000	251498	379048	265927	280568	400811	323274	312994	447134	387062	344814	492591
1 13/16	188500	264000	264000	377000	268935	405330	284366	300021	428601	345689	334696	478136	413899	368721	526745
1 7/8	201000	281000	281000	402000	286896	432399	303357	320057	457225	368775	357048	510068	441541	393346	561923
1 15/16	214000	299000	299000	427000	305373	460247	322894	340670	486671	392526	380043	542918	469978	418679	598112
2	227000	318000	318000	454000	324361	488865	342971	361853	516932	416932	403674	576676	499201	444712	635302
2 1/16	241000	337000	337000	482000	343853	518243	363582	383598	547997	441988	427932	611331	529200	471437	673481
2 1/8	255000	357000	357000	510000	363844	548373	384719	405899	579856	467684	452811	646873	559966	498845	712635
2 3/16	269000	377000	377000	598000	384327	579244	406378	428750	612500	494013	478303	683290	591491	526928	752755
2 1/4	284000	396000	396000	570000	405297	610849	428551	452144	645920	520968	504400	720572	623764	555679	793827
2 5/16	299000	418000	418000	538000	426747	643178	451232	476074	680105	548540	531096	758708	656776	585088	835840
2 3/8	314000	440000	440000	628000	448672	676222	474414	500532	715046	576721	558381	797687	690519	615147	878782
2 7/16	330000	462000	462000	660000	471064	709972	498092	525514	750733	605505	586250	837499	724982	645849	922641
2 1/2	346000	484000	484000	692000	493920	744418	522258	551010	787158	634883	614693	878133	760157	677184	967406
2 9/16	363000	507000	507000	726000	517231	779553	546907	577016	824309	664847	643705	919578	796034	709145	1013064
2 5/8	379000	530000	530000	758000	540993	815365	572032	603524	862177	695390	673276	961823	832603	741723	1059604
2 11/16	396000	554000	554000	792000	565198	851847	597626	630528	900754	726504	703401	1004858	869857	774910	1107014
2 3/4	413000	578000	578000	826000	589842	888989	623684	658020	940029	758181	734071	1048672	907784	808698	1155282
2 13/16	431000	603000	603000	861000	614918	926783	650199	685994	979992	790414	765278	1093254	946377	843078	1204397
2 7/8	449000	628000	628000	897000	640420	965218	677164	714444	1020634	823194	797016	1138593	985625	878042	1254345

TESTING LOAD OF ANCHOR CHAIN AND ACCESSORIES & MOORING CHAIN

Diameter Of Chain	ANCHOR CHAIN				OFFSHORE MOORING CHAIN										
	ABS,BV,CCS,CR,DNV,GL, KR,LR,NK,RINA,RMRS				API		ABS	DNV / ABS	ABS/DNV	ABS/DNV			ABS/DNV		
							C/EL/E	C/EL/E/SL / SL	C/EL/E/SL	C/EL/E	SL	C/EL/E/SL	C/EL/E	SL	C/EL/E/SL
	Grade2		Grade3		ORQ		RQ3	NVR3/RQ3	NVR3/RQ3	RQ3S/NVR3S			RQ4/NVR4		
	PL C=1422	BL C=1991	PL C=1991	BL C=2844	PL C=2030.5	BL C=3060.3	PL C=2147	PL C=2265.2	BL C=3236	PL C=2610	PL C=2527	BL C=3610	PL C=3125	PL C=2783.9	BL C=3977
in	lbf	lbf	lbf	lbf	lbf	lbf	lbf	lbf	lbf	lbf	lbf	lbf	lbf	lbf	lbf
2 15/16	467000	654000	654000	934000	666341	1004287	704573	743362	1061945	856514	829276	1184680	1025519	913582	1305116
3	485000	679000	679000	970000	692677	1043979	732419	772742	1103917	890365	862051	1231501	1066051	949689	1356698
3 1/16	504000	705000	705000	1008000	719421	1084286	760698	802577	1146538	924742	895334	1279049	1107210	986356	1409079
3 1/8	523000	732000	732000	1046000	746566	1125199	789400	832860	1189799	959634	929117	1327310	1148987	1023573	1462247
3 3/16	542000	759000	759000	1084000	774107	1166708	818522	863584	1233692	995036	963393	1376275	1191374	1061333	1516190
3 1/4	562000	787000	787000	1124000	802038	1208804	848055	894744	1278205	1030938	998153	1425933	1234361	1099628	1570897
3 5/16	582000	814000	814000	1163000	830353	1251479	877995	926331	1323330	1067334	1033392	1476274	1277938	1138448	1626355
3 3/8	602000	843000	843000	1204000	859045	1294723	908333	958340	1369057	1104215	1069100	1527285	1322096	1177787	1682552
3 7/16	622000	871000	871000	1244000	888109	1338528	939065	990763	1415376	1141573	1105271	1578958	1366826	1217635	1739478
3 1/2	643000	900000	900000	1285000	917539	1382883	970183	1023595	1462278	1179402	1141896	1631280	1412119	1257984	1797119
3 9/16	664000	929000	929000	1327000	947328	1427780	1001681	1056827	1509752	1217693	1178969	1684242	1457965	1298826	1855465
3 5/8	685000	958000	958000	1369000	977470	1473210	1033553	1090453	1557790	1256438	1216482	1737832	1504356	1340152	1914503
3 3/4	728000	1019000	1019000	1455000	1038792	1565631	1098392	1158863	1655518	1335260	1292798	1846854	1598731	1424226	2034609
3 7/8	772000	1080000	1080000	1543000	1101454	1660074	1164650	1228768	1755383	1415807	1370783	1958261	1695171	1510139	2157342
3 15/16	794000	1111000	1111000	1587000	1133274	1708031	1198295	1264266	1806093	1456707	1410383	2014832	1744142	1553765	2219664
4	816000	1143000	1143000	1632000	1165410	1756466	1232275	1300117	1857309	1498015	1450377	2071967	1793601	1597825	2282608
4 1/8	862000	1207000	1207000	1724000	1230610	1854734	1301217	1372853	1961219	1581824	1531521	2187886	1893946	1687218	2410311
4 1/4	908000	1272000	1272000	1817000	1297007	1954805	1371423	1446925	2067035	1667170	1614153	2305932	1996133	1778251	2540358
4 3/8	956000	1338000	1338000	1911000	1364552	2056606	1442843	1522277	2174681	1753992	1698214	2426019	2100086	1870857	2672653
4 1/2	1004000	1405000	1405000	2008000	1433196	2160004	1515426	1598856	2284079	1842227	1783643	2548061	2205732	1964972	2807102
4 5/8	1053000	1474000	1474000	2105000	1502892	2265107	1589121	1676607	2395153	1931814	1870381	2671972	2312996	2060527	2943610
4 3/4	1102000	1543000	1543000	2204000	1573591	2371662	1663876	1755478	2507825	2022690	1958367	2797667	2421803	2157458	3082083
4 7/8	1153000	1613000	1613000	2305000	1645244	2479655	1739640	1835413	2622019	2114793	2047541	2925058	2532079	2255698	3222425
5	1203000	1685000	1685000	2407000	1717804	2589014	1816363	1916360	2737657	2208061	2137843	3054061	2643751	2355180	3364543
5 1/8	1255000	1757000	1757000	2509000	1791221	2699666	1893992	1998263	2854661	2302431	2229212	3184588	2756742	2455838	3508340
5 1/4	---	---	---	---	1865448	2811539	1972478	2081070	2972957	2397842	2321589	3316555	2870979	2557606	3653723
5 3/8	1359000	1903000	1903000	2718000	1940436	2924558	2051768	2164726	3092465	2494232	2414913	3449876	2986388	2660418	3800597
5 1/2	---	---	---	---	2016137	3038652	2131813	2249176	3213109	2591537	2509125	3584463	3102894	2764207	3948867
5 5/8	1466000	2052000	2052000	2935000	2092502	3153747	2212559	2334369	3334812	2689697	2604163	3720232	3220423	2868907	4098439
5 3/4	1520000	2128000	2128000	3039000	2169484	3269771	2293958	2420248	3457497	2788649	2699968	3857097	3338900	2974452	4249217
5 7/8	---	---	---	---	2247033	3386651	2375957	2506761	3581087	2888331	2796480	3994971	3458250	3080776	4401108
6	1629000	2280000	2280000	3257000	2325102	3504313	2458504	2593854	3705505	2988680	2893638	4133768	3578401	3187811	4554015
6 1/8	---	---	---	---	2403641	3622686	2541550	2681472	3830674	3089635	2991382	4273403	3699276	3295492	4707846
6 1/4	1684000	2357000	2357000	3367000	2482604	3741695	2625043	2769561	3956516	3191133	3089653	4413790	3820801	3403753	4862504
6 3/8	1795000	2512000	2512000	3589000	2651941	3861269	2708932	2858069	4082955	3293113	3188389	4554842	3942903	3512527	5017896

TESTING LOAD OF STUDLESS CHAIN

Diameter Of Chain	Grade 1		Grade 2		Grade 3		Approx..mass (27.5m)
	PL	BL	PL	BL	PL	BL	
mm	KN	KN	KN	KN	KN	KN	Kg
6	6.62	13.32	9.30	18.60			21.45
7	9.02	18.13	12.60	25.20			29.15
8	11.78	23.68	16.50	33.00			38.23
9	14.90	29.97	20.90	41.80			48.40
10	18.40	37.00	25.80	51.60			29.68
11	22.26	44.70	31.20	62.40			72.33
12.5	28.75	57.81	41.20	82.60			93.5
14	34.78	69.93	51.00	101.90			117.15
16	47.10	94.72	66.20	132.30	92.42	184.83	152.9
17.5	56.35	113.31	78.89	157.78	110.55	221.10	182.8
19	66.42	133.57	93.60	187.20	130.32	260.64	249.5
20.5	77.33	155.49	108.64	217.27	151.70	303.42	275.4
22	89.06	179.08	125.40	250.90	174.40	349.40	328.6
24	105.98	213.25	149.90	298.90	207.90	415.80	385.0
26	124.38	250.12	175.40	350.80	244.00	488.00	449.1
28	144.26	290.08	203.80	406.70	283.00	566.00	516.7
30	165.60	333.00	234.2	467.50	324.90	649.80	589.4
32	188.42	378.88	265.60	531.20	369.60	739.30	664.6
34	212.70	427.72	299.90	599.80	417.30	834.60	752.9
36	238.46	479.52	336.10	672.30	467.80	935.70	861.2
38	265.70	534.28	374.40	748.70	521.30	1042.50	957.5
40	249.40	592.00	414.50	829.10	577.60	1155.20	1056.2
42	324.58	652.68	457.70	915.30	636.80	1273.60	1166.5
44	356.22	716.32	502.70	999.60	698.90	1398.00	1270.4
46	389.34	782.92	548.80	1097.6	763.90	1527.80	1396.6
48	423.94	852.48	597.80	1195.6	831.70	1663.50	1520.6
50	460.00	926.09	648.80	1239.6	902.50	1805.00	1650.0

ARRANGEMENT OF ANCHOR CHAIN

01a

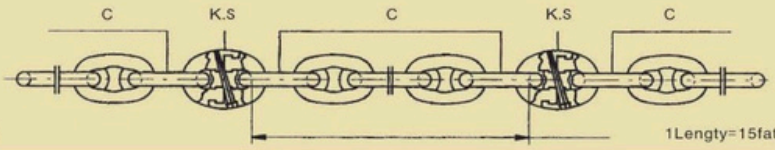

Anchor chain all common links

1Lengty=15fathoms=90feet=27.50metres

02a

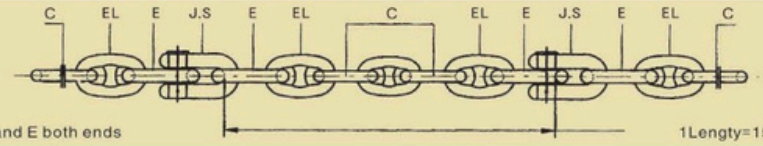

Anchor chain length with EL and E both ends

1Lengty=15fathoms=90feet=27.50metres

03a

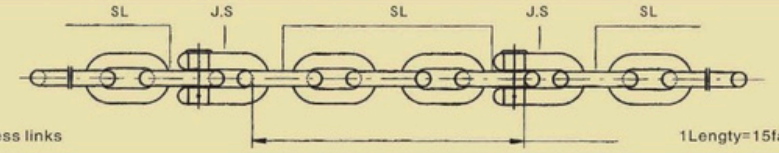

Anchor chain length all studless links

1Lengty=15fathoms=90feet=27.50metres

04a

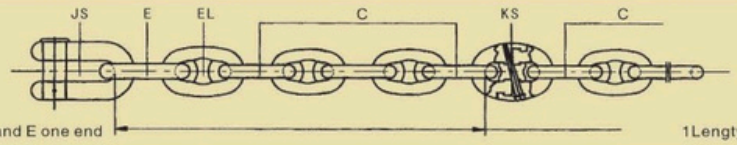

Anchor chain length with EL and E one end

1Lengty=15fathoms=90feet=27.50metres

05sc

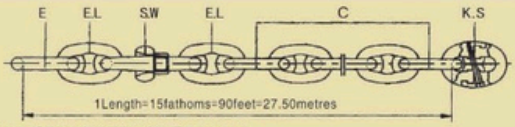

Swivel Chain length with E one end

06sc

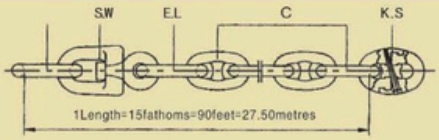

07sc

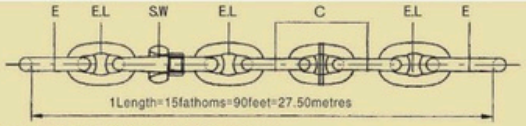

Swivel Chain length with E both ends

08sc

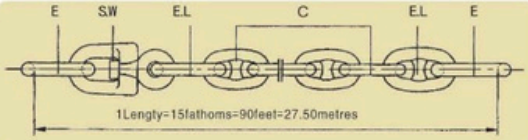

09sc

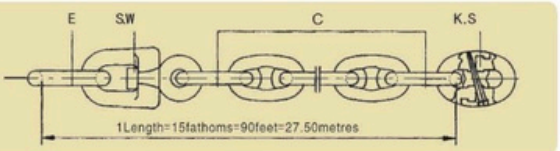

10sc

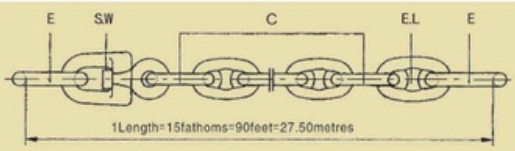

11sc

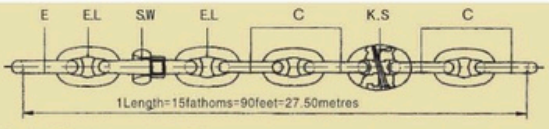

Swivel Chain length with E one end

12sc

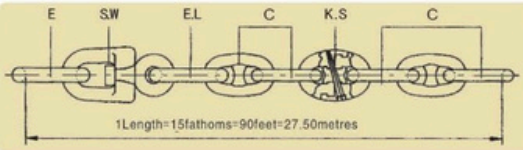

13sf

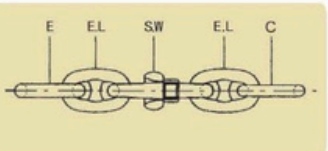

14sf

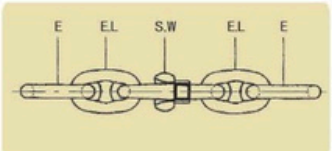

15sf

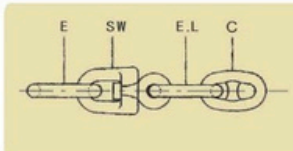

16sf

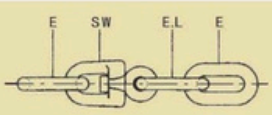

17sf

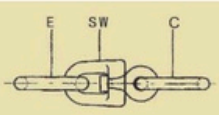

18sf

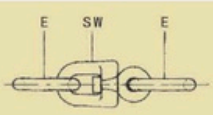

19ta

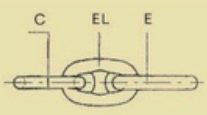

20ta

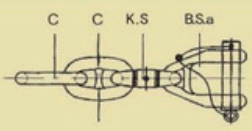

21ta

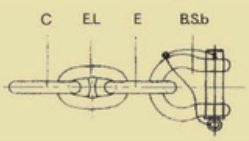

Safety Equipment



Hydrostatic Release Unit

SOLAS-compliant release unit that automatically deploys the liferaft or EPIRB at depths of 1.5–4 m underwater. Includes a double-looped rope line, release mechanism, and weak link.

IMPA: 330119

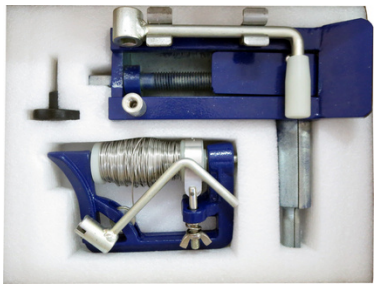

Binding Machine Fire Hose

Portable tool for securely binding firefighting hoses (25–110 mm) onto coupling shanks using copper, G.I., or stainless steel wire. Accepts 1.6 mm galvanised wire as standard binding material.

IMPA: 330752



Box Keeping, Shore Connection

Glass-fibre reinforced polyester box for storing the international shore connection. Smooth exterior finish with corrosion-resistant construction for reliable long-term deck storage.

IMPA: 330840



Breath Alcohol Measuring Instrument

Precision breath alcohol tester operable with a single button, featuring a backlit full-text display with LED and audible end-of-test signal. Supports both active mouthpiece and passive ambient air measurement modes.

IMPA: 331221

Safety Equipment



Immersion Suit

Foam rubber immersion suit that prevents dangerous body heat loss when submerged in cold water. MED-approved and mandatory for rescue boat crew and open lifeboat assignments per SOLAS.

IMPA: 330195



Fishing Tackle

Liferaft survival fishing kit providing essential hooks, lines, and lures to help survivors source food during extended sea emergencies. Required liferaft accessory per SOLAS guidelines.

IMPA: 330254



Life Jacket Light / Strobe Light

Water-activated life jacket light delivering a 0.75 cd signal for a minimum of 8 hours. Battery activates automatically upon immersion for immediate visibility in man-overboard situations.

IMPA: 330143

Safety Equipment



Smart Sensor/Detector

Personal multi-gas monitor that simultaneously detects combustible gases, toxic gases, and oxygen deficiency in the atmosphere. Compact full-function device essential for confined space entry.

IMPA: 330521

Pneumatic & Electrical Tools



Turbine Fan Water Driven

High-performance water-driven turbine ventilation fan with a non-spark, corrosion-coated impeller for safe gas-freeing of tanks and large enclosed spaces. Airflow of 70–220 m^3/min with deep tank penetration capability.

IMPA: 591436



Derusting Brush Air, MAG9000

Pneumatic rotary derusting brush running at 9,000 min^{-1} for rapid paint and rust removal on steel surfaces. Accepts cup-type wire brush attachments for efficient surface preparation.

IMPA: 592071

Pneumatic & Electrical Tools

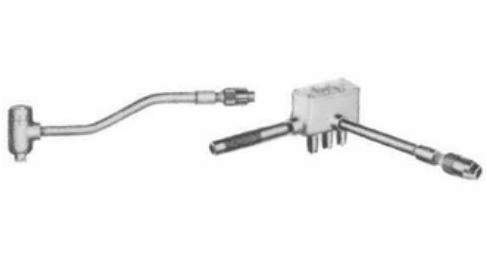

Scaling Hammer Pneumatic, Single

Air-powered single-chisel scaling hammer for removing rust, scale, and old coatings from steel hull and structural surfaces. Delivers rapid impact blows to prepare surfaces for painting or welding.

IMPA: 590382

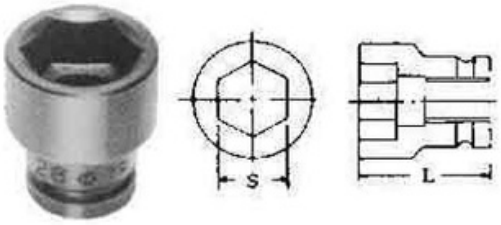

Socket For Impact Wrench

Heavy-duty 6-point 3/4" square drive impact sockets ranging 17–46 mm, engineered to absorb the high torque of pneumatic impact wrenches. Multiple sizes available for engine room and deck maintenance tasks.

IMPA: 590229-44



Hold Cleaning Gun Trelawny

Stainless steel hold-cleaning gun using combined water and compressed air to project a tightly compressed jet up to 30 m. Single-operator design with adjustable pressure control for efficient cargo hold cleaning on bulk carriers.

IMPA: 590742



Impact Wrench Cordless,

Compact 110 V cordless impact wrench with 3/8" square drive for fast nut and bolt work without an air supply. Ideal for maintenance tasks in areas where pneumatic connections are unavailable.

IMPA: 590921

Pneumatic & Electrical Tools



Fan Ventilation Electric Portable

Portable single-phase AC electric ventilation fan (142 mm) for confined space airing and general shipboard ventilation. Lightweight design allows quick repositioning to meet changing ventilation requirements.

IMPA: 591401

Hand Tools



Socket Wrench Set

Comprehensive 3/4" drive socket wrench set covering 19–60 mm across 20 sockets with 6 drive tools. Thin-walled chrome alloy sockets reach bolts in narrow, hard-to-access machinery locations.

IMPA: 610151



Wrench Single Head Ratchet & Spud

Single-head 12-point ratchet wrench with spud alignment pin, 21 mm opening, for fast one-handed tightening and loosening of bolts. Ratchet mechanism reduces repositioning time in tight machinery spaces.

IMPA: 611032

Hand Tools

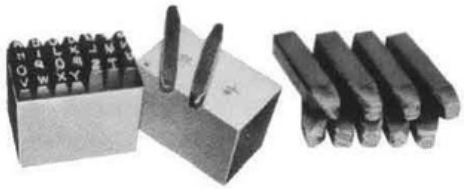

Letter Set Steel Alphabet 27's 8MM

27-piece hardened steel alphabet punch set with 8 mm character size for permanent marking on metal surfaces. Essential for stamping identifiers, part numbers, and equipment labels onboard.

IMPA: 613108

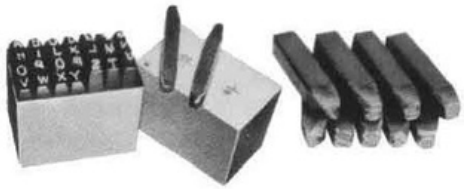

Figure Set Steel 9's 3MM

9-piece hardened steel number punch set with 3 mm digit size for precise marking of small components and pipe fittings. Compact size suits detailed identification work on engine parts.

IMPA: 613119

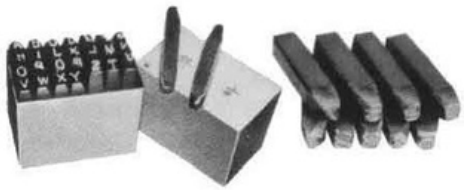

Figure Punch Set 0-9 Size 8MM 9 Pcs

9-piece digit punch set (0–9) with 8 mm character height for bold, permanent number stamping on steel and other metals. Suited for marking hull plates, machinery housings, and deck fittings.

IMPA: 613123



Clamp Screw C-Type

Heavy-duty C-type screw clamp with 25 mm jaw opening for firmly holding workpieces during cutting, welding, or assembly. Strong steel construction maintains clamping pressure under demanding workshop conditions.

IMPA: 613716-25

Hand Tools



Wrench Striking Single Open

Beryllium copper / aluminium bronze single open-end striking wrenches (30–41 mm) for safe use in flammable or explosive atmospheres. Designed for heavy hammer-assisted loosening of seized fasteners where spark risk is critical.

IMPA: 615580-84



Wrench Striking Ring 12 Point

12-point aluminium bronze ring striking wrenches (26–46 mm) engineered for non-sparking use in hazardous areas such as tank cleaning and gas-freeing operations. Full bolt-head engagement provides maximum torque transfer.

IMPA: 615601-08



Scraper Hand Non-Spark 40X75MM

40×75 mm beryllium copper alloy hand scraper for removing scale, paint, and rust in spark-sensitive zones such as cargo tanks and pump rooms. Safe for use wherever ignition risk demands non-sparking tools.

IMPA: 615840



Scraper Nonspark 75X115MM Alloy

Larger 75×115 mm beryllium copper alloy scraper for wider surface coverage in hazardous environments. Ideal for paint and scale removal in confined cargo or tank spaces where sparks must be avoided.

IMPA: 615841

Hand Tools



Scraper Angle Non-Spark 40X250MM

Angled aluminium bronze non-spark scraper (40×250 mm) for reaching into corners and tight spaces during scale and paint removal in hazardous areas. Angled blade reduces wrist strain in confined operations.

IMPA: 615846



Scraper Angle Non-Spark 40X300MM

Extended 40×300 mm angled aluminium bronze scraper for non-spark surface preparation in explosive atmospheres. Extra length improves reach in deep tank corners and structural recesses.

IMPA: 615847



Puller Gear & Wheel 2-Arm

2-arm gear and wheel puller (0–150 mm spread) for non-destructive removal of gears, pulleys, and bearings from shafts. Adjustable jaws provide versatile grip on various component sizes.

IMPA: 615062



Truck Platform Steel 750X1200MM

Heavy-duty 750×1200 mm steel platform truck with single handle and 4 solid tyres for moving heavy stores and equipment on deck or in cargo holds. Robust frame handles demanding shipboard logistics.

IMPA: 617154

Hand Tools



Carrier For Drum Steel Frame

Steel-frame drum carrier with 2 solid tyres for safely transporting 200-litre drums across deck and engine room floors. Tilting cradle design allows one person to manoeuvre full drums with minimal effort.

IMPA: 617193



Grease Gun Lever Type Standard

Yamada KH-35 400 cc lever-type grease gun for precise application of grease to nipples and fittings throughout the vessel. Standard lever action delivers consistent pressure for efficient lubrication of machinery bearings.

IMPA: 617702

Cloth & Linen Products

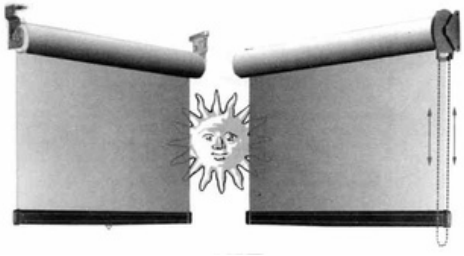

Solar Shade, Spring Roller Type

Universal locking-bracket solar shade for ship bridge and wheelhouse windows with 100% optical clarity and scratch-resistant 5-MIL screen. Pull-to-raise spring roller mechanism includes both outside and inside mounting flanges.

IMPA: 150721

Painting Equipment



Paint Stirrer Pneumatic

Air-driven paint stirrer that mounts directly onto containers up to 40 litres to ensure thorough mixing before spraying. Consistent stirring prevents pigment settling and maintains uniform paint viscosity.

IMPA: 270581



Spray Gun Hand

Medium-size pressure-feed conventional air spray gun with 1.2 mm nozzle producing 480 L/min fluid output with a straight spray pattern. Suitable for applying marine coatings, primers, and topcoats with fine finish quality.

IMPA: 270512



Gun Airless Spray Ace Gun

Asahi Sunac MG7 II airless spray gun weighing only 375 g for fatigue-free long-duration painting operations. Delivers high-atomisation, uniform spray patterns ideal for marine anti-corrosive and antifouling coatings.

IMPA: 270321

Petroleum Products



Molykote 1000 1KG

Lead- and nickel-free mineral oil paste with copper, graphite, and solid lubricants for threaded and bolted metal joints. Rated –30 °C to +650 °C, providing high load capacity, corrosion protection, and non-destructive dismantling.

IMPA: 450521



Anti-Seize Compound

High-performance semi-synthetic compound with ultra-pure copper particles that protects fasteners against seizure from extreme temperature, pressure, and corrosion. Reinforced with anti-oxidants and corrosion inhibitors for outstanding thread protection.

IMPA: 450566

Hardware



Door Adjuster Stainless Steel

350 mm stainless steel door holder that keeps cabin or watertight doors open at a user-selected angle via a simple adjusting screw. Supplied with ø4.1 mm mounting screws for easy installation.

IMPA: 490549

Nautical Equipment



Binocular Night Vision

2.5×42 night-vision binoculars providing enhanced visibility for low-light bridge watch and anti-piracy operations. Large 42 mm objective lenses maximise light gathering for reliable observation at sea after dark.

IMPA: 370355-56

Electrical Equipment



Bakelite Sheet

Phenolic resin laminate sheet (1×1000×1000 mm) offering excellent electrical insulation, mechanical strength, and resistance to oils and solvents. Widely used as insulating panels and spacers in marine switchboards and electrical enclosures.

IMPA: 795382-86

Packing & Jointing



Tape Glass 1.7X38MMX30MTR

1.7 mm thick, 38 mm wide woven glass-fibre tape on a 30 m roll for high-temperature insulation wrapping and reinforcement of pipe lagging. Excellent thermal stability and chemical resistance for engine room applications.

IMPA: 811710

Packing & Jointing



Leak Repair Kit First Response

Emergency kit for quickly sealing leaks in pipes, tanks, and drums using a variety of sealing devices and materials. Covers pipe leaks, surface holes, cracks, and gashes for fast onboard damage-control response.

IMPA: 812368

Welding Equipment



Gas Cutting Torch With Nozzle Set

Oxy-fuel cutting torch (Model No. 1 / No. 2) with nozzle set capable of cutting steel up to 30 mm thick at ~460 mm overall length. Lightweight 730 g design for controlled and precise thermal cutting onboard.

IMPA: 850251-52



Filler Metal Coated Brass Brazing

Machine-coated wire-drawn brass brazing rods (2.0×1000 mm, 5 kg) with low-flame flux coating producing fine deposits and tensile strength of 36–43 kgf/cm². Suitable for gas brazing copper, bronze, and dissimilar metal joints.

IMPA: 850451